Vogel & Plötscher

PART OF ROBEL GROUP

VIG 1300

Sighting and levelling device

- High-quality optics
- Sighting and levelling
- Ease of use

vogelundploetscher.de

VIG 1300

VIG 1300 is the versatile device for all levelling tasks. As sighting device, it is used for determining along-track heights, and in its levelling mode for determining the track height referred to top of track.

Precision and reliability

VIG 1300 convinces with a precise determination of the measuring values. The user-friendly tripod ensures with the help of the self-developed quick fixing a stable positioning on the track. The high-quality optics is vertical adjustable for 50 mm (optional 150 mm).
The levelling stick has got a measuring scale, containing both a millimeter and an "E"-division and can be divided into two parts for easy transport.
The optics is supplied in a robust, well-padded transport case. Adapters for connection on grooved rails (Ri60 or P37a) are available on request.

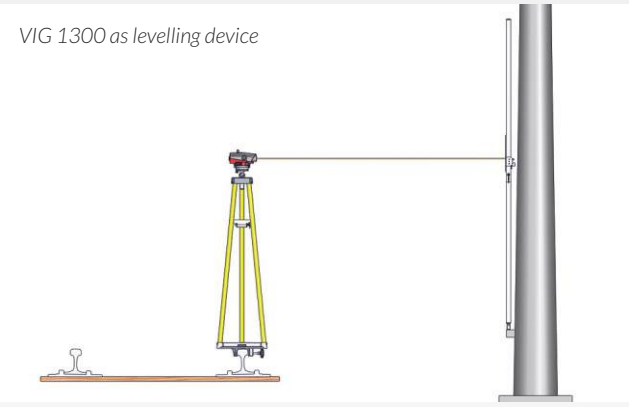

VIG 1300 as levelling device

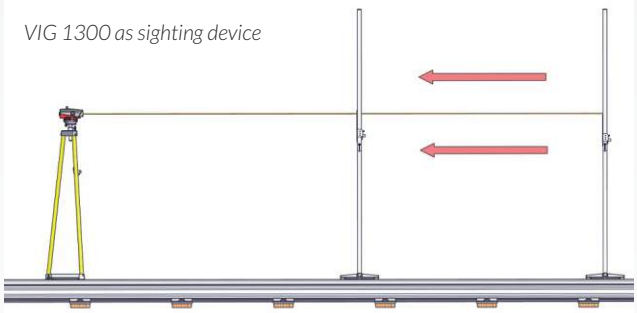

VIG 1300 as sighting device

Measuring scale with „E"-division

VIG 1300 with fixed and divided levelling stick

Technical data

Scale graduation levelling stick:	1,0 mm
Measuring range levelling stick:	+150 to -100 mm
Magnification:	24 times
Standard deviation (at 1 km double levelling):	2 mm
Height variance (single measurement over 30 m):	1,2 mm
Dimensions | Weight	
> VIG (with optics):	~ 330 x 380 x 1600 mm
> VIG (without optics):	~ 330 x 330 x 1300 mm
> Weight (incl. optics and levelling stick):	~ 10,3 kg

Key features

- **Easy use**
- **High-quality optics**
- **Quick fixing on the track**
- **Padded transport case for the optics**
- **Robust construction**
- **Up to 150 mm adjustment of the optics (option)**

For more information see vogelundploetscher.de

Vogel & Plötscher GmbH & Co. KG
Geldermannstr. 4
D-79206 Breisach
Tel: +49 (0)7667 946100
info@voploe.de

Vogel & Plötscher
PART OF ROBEL GROUP

ROBEL GROUP
ROBEL
ROBEL RAIL AUTOMATION
Vogel & Plötscher
Plasser ROBEL SERVICES

10/2025 © Vogel & Plötscher GmbH & Co. KG. Technical specifications subject to change.